ELGA VEOLIA

MEDICA 50/100/150 OPERATOR MANUAL

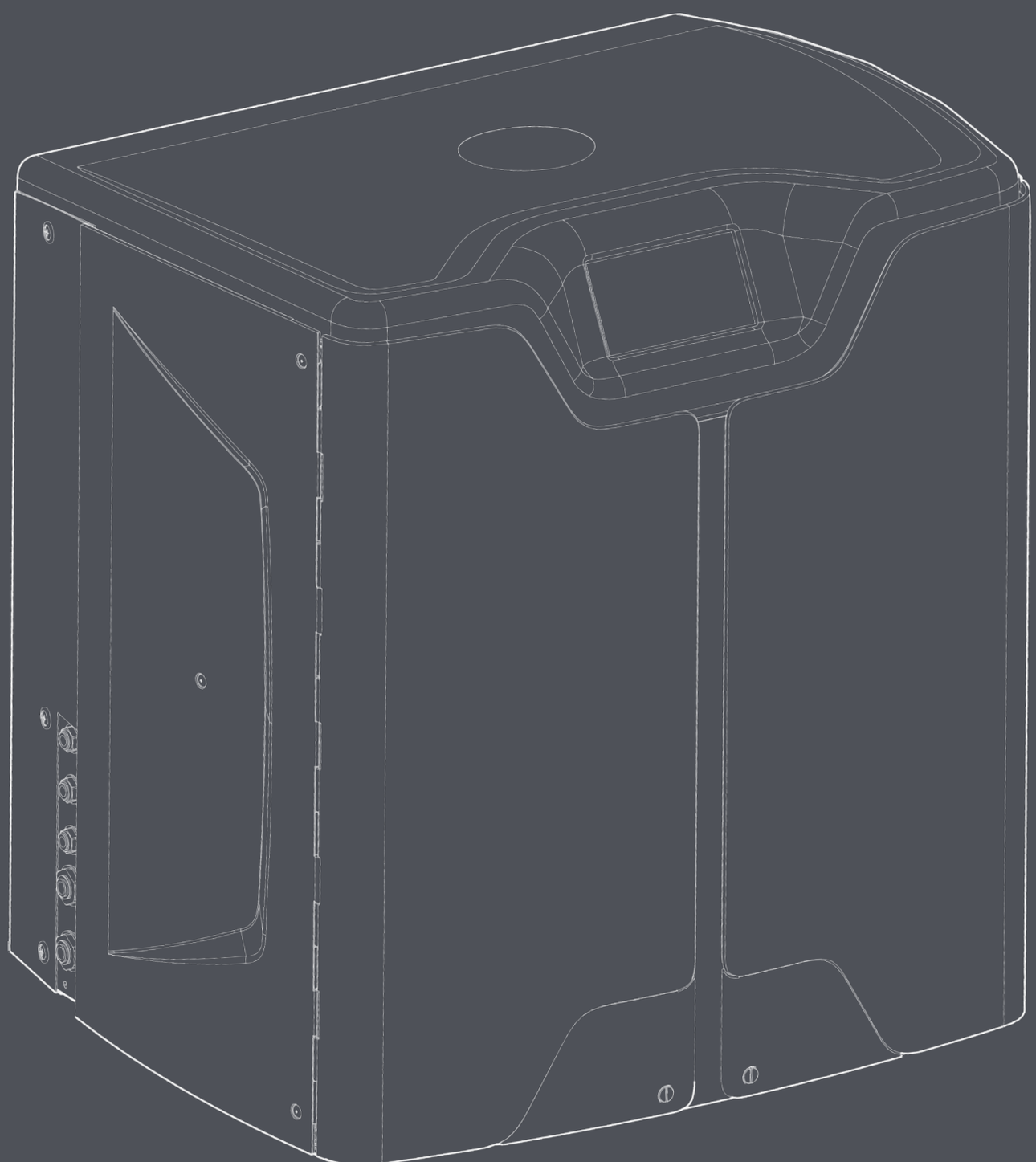

MANU41691

Version 1

WATER PURIFICATION

Table of Contents

Table of Contents

1.1 Use of this Manual

This manual contains full details on operation of the **MEDICA** system. If this system is used contrary to the instructions in this document, then the safety of the user may be compromised.

1.2 Customer Support

Service support and consumable items are available from ELGA LabWater. Refer to customer service contact details shown at the end of this publication.

1.3 Product Range

This Operator Manual has been prepared for the **MEDICA 50/100/150** product models. The product information for each model can be found in the table below:

MEDICA PRODUCT RANGE				
Part No.	Product Name	Power Rating	Dry Weight	Full of Water Weight
MED150M1-230	MEDICA 150	230V 50 hz	103KG	197KG
MED150M1-115	MEDICA 150	115V 60 hz	103KG	197KG
MED100M1-230	MEDICA 100	230V 50 hz	101KG	195KG
MED100M1-115	MEDICA 100	115V 60 hz	101KG	195KG
MED050M1-230	MEDICA 50	230V 50 hz	100KG	193KG
MED050M1-115	MEDICA 50	115V 60 hz	100KG	193KG

MEDICA products are designed to be safe, however, it is important that personnel working on these systems understand any potential dangers. All safety information detailed in this manual is highlighted as **WARNING** and **CAUTION** instructions. These are used as follows:

WARNING! WARNINGS ARE GIVEN WHERE FAILING TO OBSERVE THE INSTRUCTIONS COULD RESULT IN INJURY OR FATALITY.

CAUTION! Cautions are given where failure to observe the instructions could result in damage to the equipment, associated equipment and processes.

2.1 Environment

The system should be installed on a flat, level surface, in a clean, dry environment.
The system is designed to operate safely under the following conditions:

- Indoor use
- Attitude up to 2000m
- Temperature Range 5°C - 40°C
- Storage Conditions 2°C - 50°C
- Maximum Relative Humidity 80% @ 31°C decreasing linearly to 50% @ 40°C non-condensing
- The system is in installation Category II, Pollution Degree 2, as per IEC 61010-1.

CAUTION! Failure to follow the environmental specification could result in damage to the system.

WARNING! IF CRITICAL ALARMS ARE ACTIVATED. ACTIVATE THE BYPASS VALVES, AND ISOLATE THE UNIT FROM THE MAINS ELECTRICAL SUPPLY, AND CONTACT YOUR SERVICE PROVIDER.

2.2 Electricity

It is essential that the electrical supply to the **MEDICA** is isolated before any items are changed or maintenance work performed, except when changing the Optimiser and Purification packs as these require the unit to be on, and following the on screen instructions. The ON/OFF switch is located on the right side at the rear of the system. The appliance coupler (mains lead) is located on the rear of the unit, to the right hand side, and should be removed to isolate the power supply prior to the commencement of any work. If access to this is restricted then it is recommended that access to the main supply socket is easily available to disconnect the electrical supply.

Please refer to system specifications for correct operational requirements.

WARNING! ONLY USE THE APPLIANCE COUPLER (MAINS LEAD) PROVIDED. THE USE OF THESE WILL ENSURE ADEQUATE EARTH PROTECTION IS PROVIDED. IF THE EQUIPMENT IS USED IN A MANNER NOT SPECIFIED BY ELGA VEOLIA, THE PROTECTION PROVIDED BY THE EQUIPMENT MAY BE IMPAIRED.

WARNING! ENSURE THE CORRECT ELECTRICAL SUPPLY IS BEING USED FOR THE SYSTEM PROVIDED. FAILURE TO DO SO COULD RESULT IN PERMANENT DAMAGE TO THE PRODUCT.

WARNING! ALWAYS ENSURE THAT THE ELECTRICAL POWER SUPPLY IS ISOLATED BEFORE WORKING INSIDE THE PRODUCT.

2.3 Pressure

Switching off the electrical supply will isolate the source of pressure. The mains water supply pressure should be isolated for service maintenance or carrying out work on the system.

2.4 Ultraviolet Light

WARNING! UNDER NO CIRCUMSTANCES SHOULD THE UV BE DISASSEMBLED. EXPOSURE COULD CAUSE SERIOUS INJURY TO EYES AND SKIN. ENSURE THE UV LAMP IS DISPOSED OF IN ACCORDANCE WITH LOCAL REGULATIONS.

2.5 Control of Substances Hazardous to Health (COSHH)

WARNING! CONSUMABLE PACKS/CARTRIDGES MUST BE HANDLED AS APPROPRIATE. DISPOSAL METHOD MUST COMPLY WITH LAB INSTRUCTIONS.

2.6 Personal Protective Equipment (PPE)

WARNING! MAINTENANCE MUST BE CARRIED OUT WITH PROPER PROTECTIVE EQUIPMENT IN LINE WITH LOCAL REGULATIONS AND RISK ASSESSMENTS.

2.7 Tools and PPE Equipment (Items not supplied)

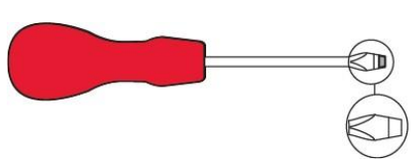

2.8 Lifting the Unit

WARNING! UNIT WEIGHS 115KG - DO NOT ATTEMPT TO LIFT. ATTEMPTING TO LIFT THE UNIT CAN RESULT IN INJURY OR DAMAGE TO THE UNIT.

This unit is not to be lifted by hand. Please follow correct lifting techniques. The use of correct lifting equipment is recommended.

3.1 Unpacking the MEDICA

Do not attempt to unpack **MEDICA** alone. For unpackaging the unit please see the link below or scan the QR code:
https://www.elgalabwater.com/operating-manuals

The following items are supplied:

1) **MEDICA**
2) Electrical supply lead
3) Quick reference guide - INST41902
4) **MEDICA** Installation Kit - LA862
5) Consumables (Supplied)

MEDICA Installation Kit (LA862)		
Quantities	Part Number	Description
6m	FTTUNY6210	Tubing 12mm
24m	FTTUPE201306	Tubing 10mm
1	TOTOGU331172	Spanner, Filter Housing (Pre-Treatment)
1	TOTOGU331173	Spanner, Filter Housing (UMF)
1	VAGTAC201262	Shut-off Valve - 10mm
1	VABLPP0208	Shut-off Valve -12mm
5	FTBEAC6010	Flow Bend Clip - 10mm
5	FTBEAC202344	Flow Bend Clip - 12mm
1	FTTEAC6005	Tee - 10mm

CONSUMABLES (Supplied)				
Quantities	Part No.	Description	Typical Service Life*	Max. Shelf Life
1	LC136M2	Composite Vent Filter (CVF)	6 months	2 years
3/2/1***	LC303	RO Cartridge Assembly	3 years *	2 years
1	LC306	Ultra Micro Filter	1 year	2 years
1	LC307	UV LED	2 years	5 years
1	LC308	EDI Stack	7 years	12 months
1	LC310	Degas Module	2 years	2 years
1	LC311	Pre-Treatment Module Filter	6-12 months	2 years
2	LC312	Optimiser Pack	2-6 months	2 years
2	LC313	Purification Pack	2-12 months	2 years
Not supplied	CT3 Tablets	Sanitisation Tablets (Not used in the USA)	Typical usage 2 - 6 tablets per 6 - 12 months**	2 years

*Service Life is an estimate only, and will depend on the application and feed water quality.

** Refer to Section 8.19 Sanitisation

*** Depending on the model

3.2 Identifying the Ports

Port Number	Description
1	Feedwater inlet
2	Pressurized drain
3	Application loop outlet
4	Application loop return
5	Reservoir Overflow
6	Manual Tank Drain
7	External Reservoir Feed
8	External Reservoir Return
9	Pressurized drain
10	EDI drain
11	Electrical Supply
12	External Reservoir Level Control
13	Hubgrade Port (do not connect to Ethernet)
14	USB Port (Unpowered USB Flash Drives only)

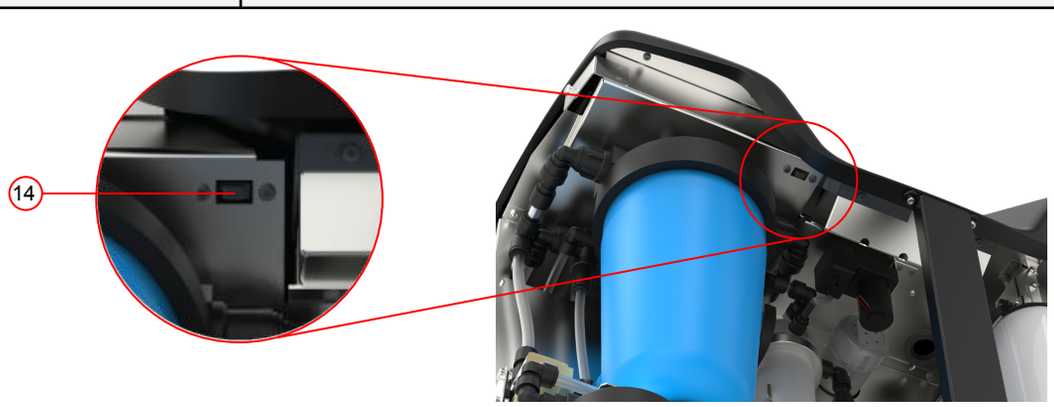

Maintenance	Access is required to the *front* of the unit for regular maintenance procedures. Occasional access is required to the top and back of the unit for full maintenance.
Electrical Supply	For safety reasons it is recommended that this unit be connected to a suitable power outlet which is easily accessible/isolatable and local to the unit.
Site	The unit is floor mounted.
Water Supply	Local potable supply with a means of isolation and check technical specifications at the end of this manual (section 11, page 35 and 36).

3.3 Connecting the MEDICA

Once the **MEDICA** unit is positioned it should be connected as follows:

1) Remove the plug and connect potable water feed supply (port 1) using tube supplied

Note: Ensure a suitable valve is fitted to allow isolation of the supply during essential maintenance.

The water pressure must not exceed 6 bar.
Ensure the tube is not kinked or twisted when the unit is in its final position.
If the unit is installed under the bench, allow sufficient slack in the flexible hoses.

1) Remove the plug and connect drain line (port 2) to local drain with tube supplied

Note: Ensure air gap is maintained from outlet of tube into a standpipe or surface drain, and that the drain cannot be higher than 1.5m.

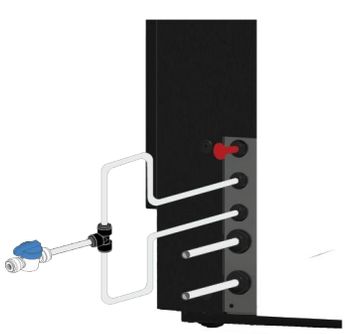

The drains can be extended to a maximum length of 5m from the product using 15 mm PEXs rigid pipe. <5m from the product using 10mm OD 7mm ID flexible tubing
It is strongly recommended that the hoses are secured to ensure they are always directed into the drain.

1) Remove the plug and connect application loop return (port 4) and application loop outlet (port 3) using tube and T-joint supplied. Connect the application feed to the application and ensure a isolation valve is installed.

Note: The product is supplied with sufficient tube to assemble a small loop. This loop can be extended to a maximum of 30m.

1) Remove the plug and connect the Reservoir Overflow (port 5) to local drain with tube supplied.

5) Port 6 is the Manual Tank Drain, leave plug inserted.

Note: If the internal reservoir needs to be drained manually, remove the plug from port 6 and open the internal valve (V12).
This port will also be utilised if the external reservoir is installed.

6) Port 7 and 8 are External Reservoir Feed, leave the plugs inserted

7) Port 9 is the Pressurized Drain for the auto-cooling option. It is used for the auto-cooling and for sanitisation. Remove the plug and connect to local drain with tube supplied.

8) Remove the plug and connect EDI Drain (port 10) to local drain with tube supplied.

9) Connect the electrical supply lead into the socket on the top right side of the **MEDICA** unit and to the local isolated supply. Before starting the commission, follow the consumables installation instructions.

10) If external reservoir is installed, the Level Control will be connected to port 12, located under the power supply port.

Note: If the External Reservoir is installed check for more information on the external reservoir instruction sheet.

3.4 Locking and Unlocking the wheels

1. Locate the wheels found at the front of the unit in each corner at the bottom, behind the doors
2. TO LOCK the wheels twist the screw clockwise until the metal screw is touching the wheel firmly, holding it in place (Fig 1)
3. TO UNLOCK the wheel, twist the screw anti clockwise until the metal screw has come away from the wheel and allows the wheel to move freely (Fig 2)

Fig 1

Fig 2

3.5 Consumable Installation

The consumables are supplied inside the top tray of the main packaging of the unit

Installing Consumables:
Pre-treatment (LC311):

1. ENSURE the unit is off and feedwater is isolated
2. OPEN doors and LOCATE the Pre-Treatment filter bowl
3. Using the tools provided in the installation kit, UNSCREW the filter bowl (Fig 1)
4. Remove the bowl
5. Remove the new pre-treatment filter from its packaging
6. Fit into the new filter bowl, lining up the centre hole
7. Fit the housing into the unit, using the tool provided in the installation kit
8. Gently TIGHTEN using the correct tool until sealed

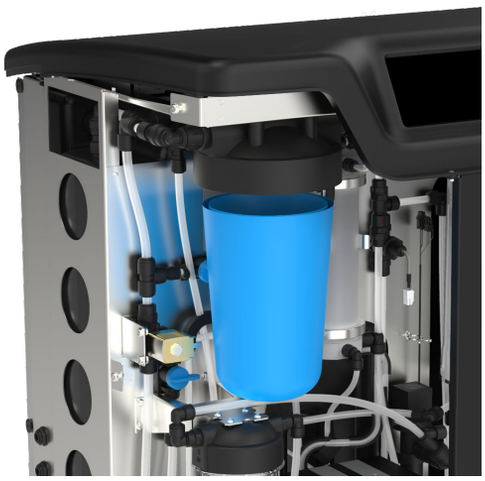

Fig 1

Fig 2

Optimiser Pack (LC312) and Purification Pack (LC313):

1. OPEN right hand door and LOCATE pack positions (LC312 with the black cap is on the left hand side and LC313 with the white cap is on the right hand side) (Fig 5)
2. TWIST the locking mechanism and lift arm (Fig 3 & 6).
3. REMOVE sealing plugs from inlet and outlet ports from new pack. (Fig 2)
4. Wet O-rings and place pack onto mounting
5. ENSURE the pack is in the correct position, aligning the centre hole with the wider outlet tube at the top of the manifold, and the thinner locating feature aligning with the second hole (Fig 3), making sure the pack handles are facing away from the mounting frame. (Fig 4, 5 & 6)
6. PUSH down on locking mechanism until pack is engaged. (Fig 5 and Fig 6)
7. TWIST the locking mechanism at the top of the mounting to lock pack in place.

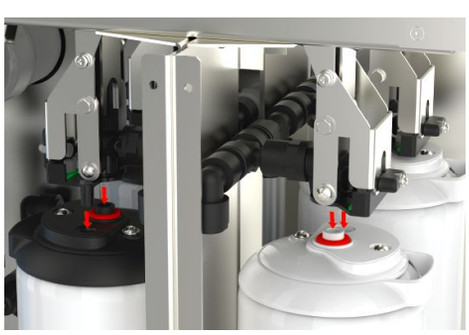

Fig 3

Fig 4

Fig 5

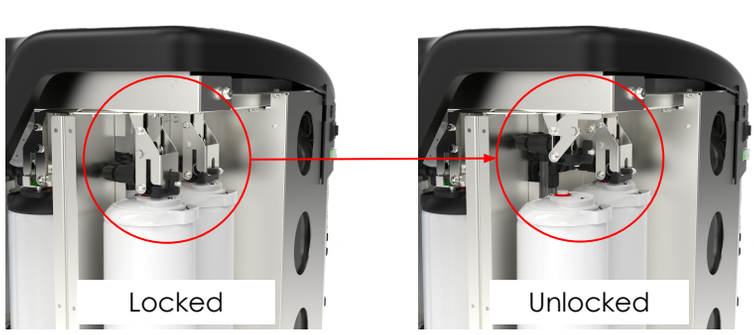

Fig 6

UMF FILTER (LC306):

1. ENSURE the unit is off and feedwater is isolated
2. OPEN doors and LOCATE the Ultra Micro Filter bowl
3. Using the tools provided in the installation kit, UNSCREW the filter bowl (Fig 1)
4. Remove the bowl
5. Remove the new UM filter from its packaging and fit into the clear bowl, lining up the centre hole.
6. Fit the housing into the unit, using the tool provided in the installation kit
7. TIGHTEN using the correct tool until sealed

Note: Installation of the UMF can be done after the installation of the Leak Detector.

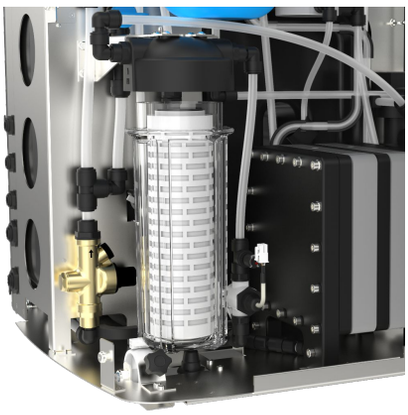

Fig 1

LEAK DETECTOR (SP1247):

Once the **MEDICA** unit is positioned and all other consumables are installed, the leak detector should be connected as follows:

1. LOCATE the leak detector in the bottom left of the unit. (Fig 2)
2. SLIDE leak detector into slot located in the front left of the unit, right of the caster.
3. Ensure the flat side of leak detect mount is flush with mounting bracket and pins are touching the floor or are within 1mm from the floor. (Fig 3)

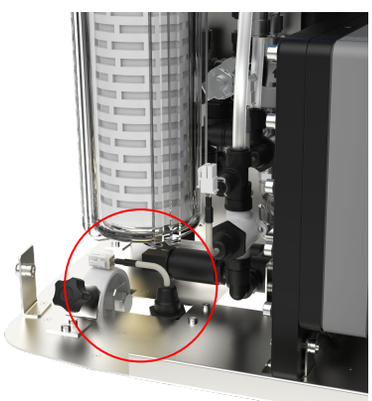

Fig 2

CAUTION! Leak detector should be removed before moving the unit anywhere to avoid damage!

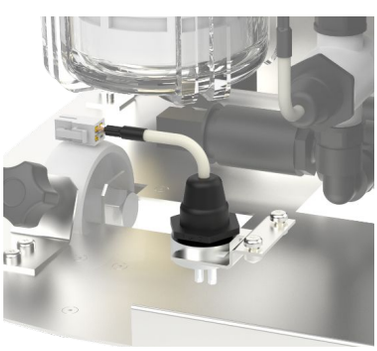

Fig 3

LOCATING THE COMPOSITE VENT FILTER (LC136M2):

The CVF must be found, and the sticker removed before starting commissioning mode.

1. UNLOCK and OPEN the doors
2. LOCATE the CVF, found behind the display screen screen (Fig 4)
3. ENSURE the CVF is properly screwed into the unit
4. REMOVE the yellow protection label

Commissioning mode may now begin

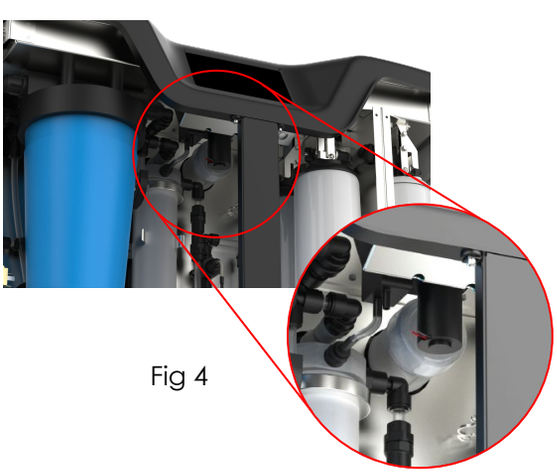

Fig 4

3.6 Commissioning

The unit is supplied with the software preset in commissioning mode. Commissioning must be completed before the system will function correctly. This sequence is active the first time the system is powered. It is recommended that a trained ELGA representative complete the installation of the product.

Before powering the unit, ensure that the water supply is open. Once the unit is powered, the user will have to set their preferred language, and the correct date and time (power the system ON, then see page 16 for setting the language). After selecting the correct time and date, and confirming, the system will enter commissioning mode. After completing the commissioning mode, the system will start normal operational mode.

The **MEDICA** operates with a tactile touch screen control panel which has a graphics display window. Details of how to use the controls are provided in the appropriate sections.
The **MEDICA** control panel has a range of control icons. General icons are as follows.

ICON	DESCRIPTION	ICON	DESCRIPTION
	Process ON		Process OFF
	Settings Button*		Information Button
	Tank Level Indicator	Eject USB	Eject USB
Shut Down	Unit Shut Down	A 79	Critical Alarm
A 109	Warning Alarm	A 91	Notification Alarm
Override	Alarm Override		Alarm Mute
	Accept		Cancel/Back

* Gives the user access to the Main Menu and subsequent screens.

A hierarchy of the screens within the **MEDICA** unit is shown on the following page. The table shows the order of each screen available to the user, along with its child screens (for example the "reset reminders" screen and its subsequent options).

The system is equipped with a touch screen. This is operated by selecting an option and clicking on the screen.

Note: depending on the screen chosen, the unit may return to the Home screen/Main Menu after use.

On clicking the "Settings Button" to access the Main Menu, the user will be requested to enter the administrator passcode. Once this passcode has been entered and accepted, the user will then be able to access the screens and change settings shown on the following table.

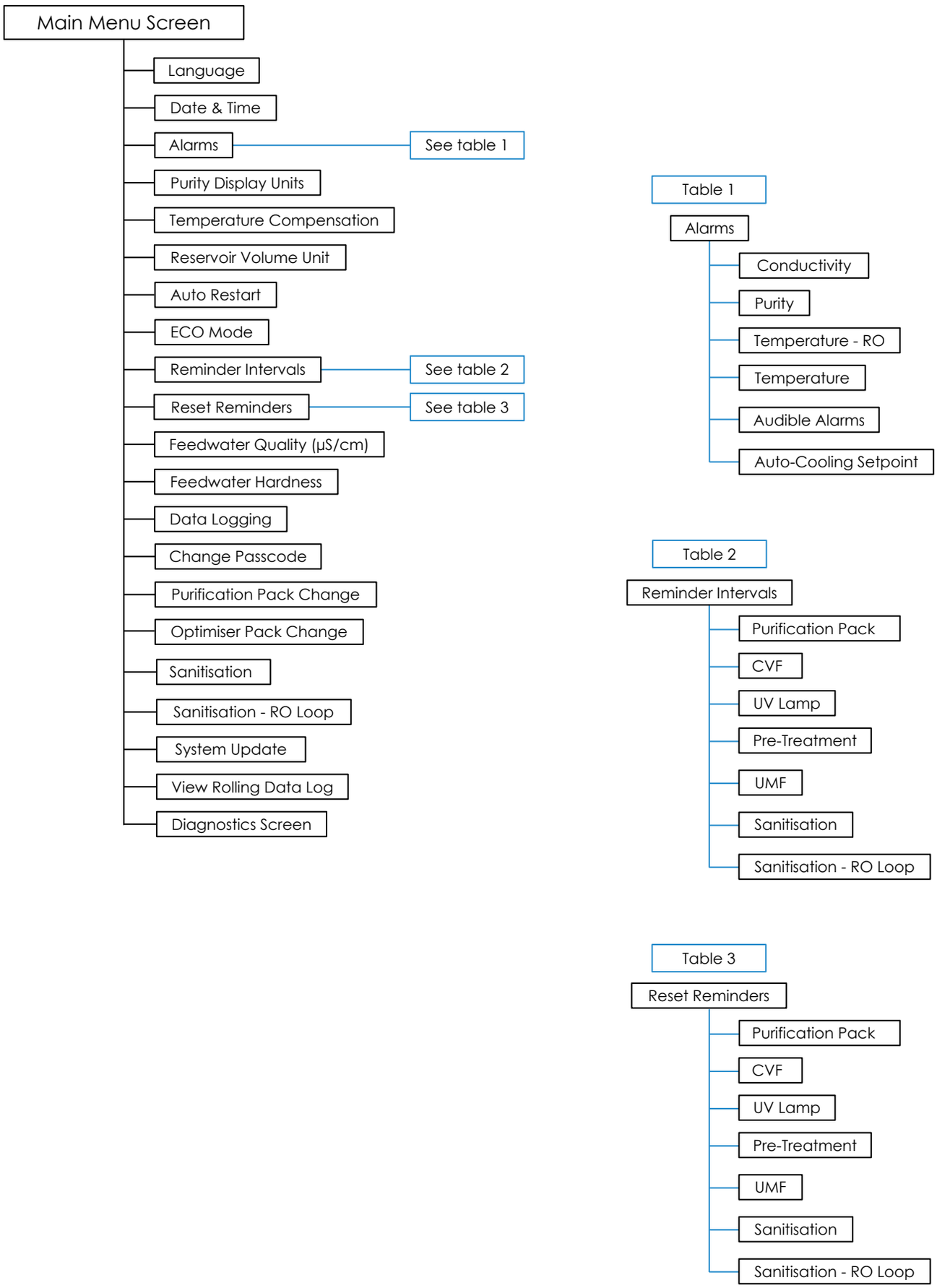
Main Menu Screen
Language
Date & Time
Alarms
See table 1
Purity Display Units
Temperature Compensation
Reservoir Volume Unit
Auto Restart
ECO Mode
Reminder Intervals
See table 2
Reset Reminders
See table 3
Feedwater Quality (µS/cm)
Feedwater Hardness
Data Logging
Change Passcode
Purification Pack Change
Optimiser Pack Change
Sanitisation
Sanitisation - RO Loop
System Update
View Rolling Data Log
Diagnostics Screen
Table 1
Alarms
Conductivity
Purity
Temperature - RO
Temperature
Audible Alarms
Auto-Cooling Setpoint
Table 2
Reminder Intervals
Purification Pack
CVF
UV Lamp
Pre-Treatment
UMF
Sanitisation
Sanitisation - RO Loop
Table 3
Reset Reminders
Purification Pack
CVF
UV Lamp
Pre-Treatment
UMF
Sanitisation
Sanitisation - RO Loop

5.1 Home Screen

Information scroll bar contains data such as -

- Temperature
- Estimated fill time - 'Filling Active - hh:mm'
- Recirculation status - 'Recirculation Active'
- Pressure (bar)
- Flow (l/min)
- Current operation mode

When the system is left idle on the Home Screen for more than 5 minutes, the system shall display a blank screen and can be woken by touching the screen.

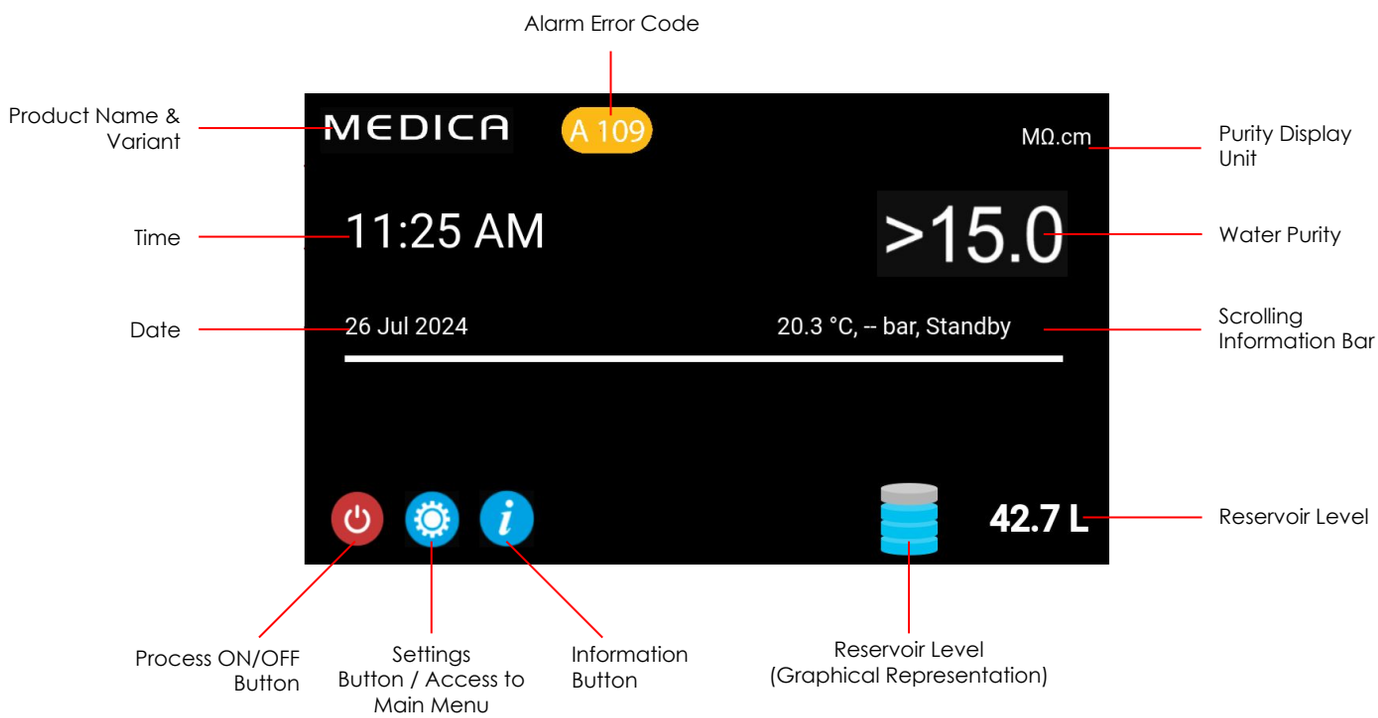

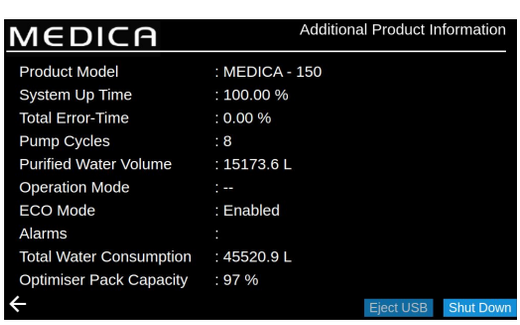

5.2 Additional Product Information

This screen displays:

1. System Uptime - functional hours over non-functional hours (caused by a critical alarm) shown as a percentage
2. Total Error Time - Percentage of total time that the unit has been in critical alarm state.
3. Pump Cycles - Number of times the pump (P1) has been turned on and off
4. Volume of Permeate water - total purified water produced (in litres)
5. Water Usage - total mains water usage
6. Optimiser Pack Capacity - is the remaining pack life in %.
7. 'Eject USB' Button to stop Data Logging (see section 8.20, page 30)
8. 'Shut Down' Button to safely shutdown the system.

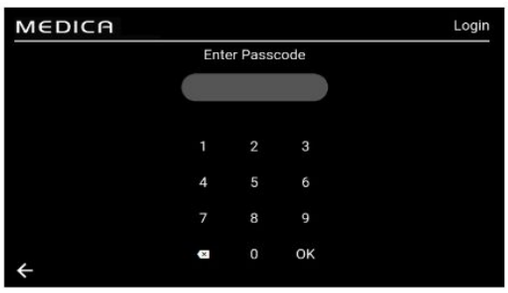

5.3 Accessing the main menu

Once the settings button has been selected, the user will be prompted to enter the passcode.

Default User Passcode: 60487315

This passcode can be changed (see section 5.6). If the user forgets the passcode, only the service engineer can reset it

5.4 Set Language

The system will support operations in various languages. Once the 'Language' option is selected, the screen will display the list of Language options with the current setting highlighted;

- English
- French
- German
- Italian
- Portuguese
- Spanish
- Chinese
- Japanese
- Korean
- Arabic

When the language is chosen, save the change by pressing the accept button and return to the Main Menu.

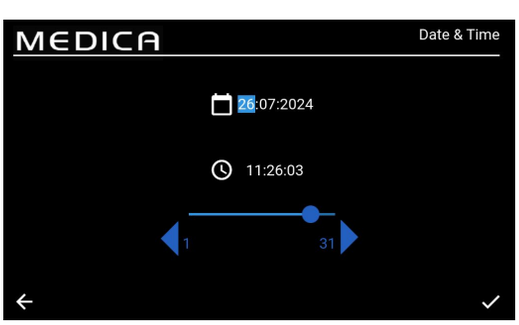

5.5 Set Date and Time

'Date & Time' is a feature to show the real-time clock. It allows users to set and store time using a standard 24-hour clock format (hh:mm) and date(dd:mm:yyyy).

Once the 'Date and Time' option is selected, the screen will display the date and time. These can be changed by clicking each interval (e.g. day, month, hour etc) and using the arrows or slider bar to change the selected interval.

The date must be selected correctly as it will affect the passcode for the service engineers. When the date and time are chosen, save the changes by pressing the accept button and return to the Main Menu.

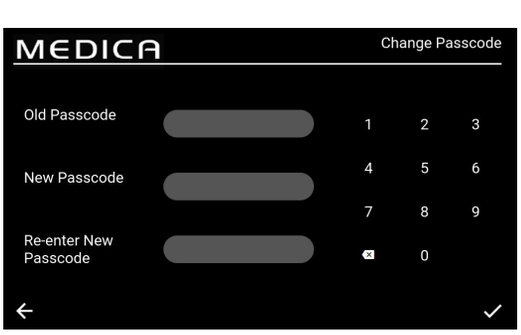

5.6 Changing the Passcode

Selecting this option from the main menu allow the admin to change the passcode to the **MEDICA** unit. On screen commands will ask the user to enter the old passcode, enter a new passcode and confirm new one. Once the new passcode has been selected, press the confirm button. The passcode will be updated and return to main menu screen.

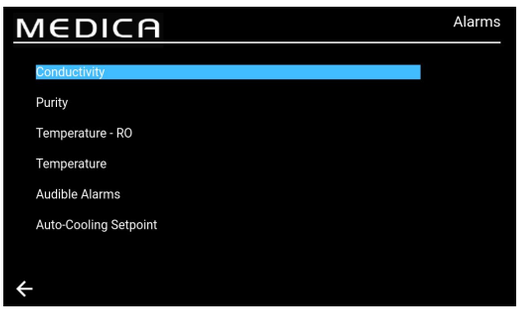

5.7 Set Alarms

The system will have the ability to set user-set points for alarms. Once the 'Alarms' option is selected, the screen will display the user-set alarms. The screen lists the Alarms options with the first option highlighted by default.
On accepting the Alarms choice, the screen will present the chosen option eg Conductivity Alarm

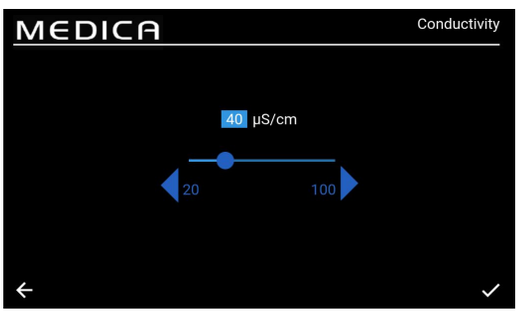

5.8 Set Permeate Conductivity Alarm

Once the 'Conductivity' option is selected, the screen will present the 'Conductivity' range. An acceptable range is from 20 to 100 µS/cm. The default setting is 40 µS/cm. This can be changed by using the arrows or slider bar to change the selected interval in increments/decrements of 1. Save the alarm set point changes by pressing the accept button and return to 'Alarms' screen.

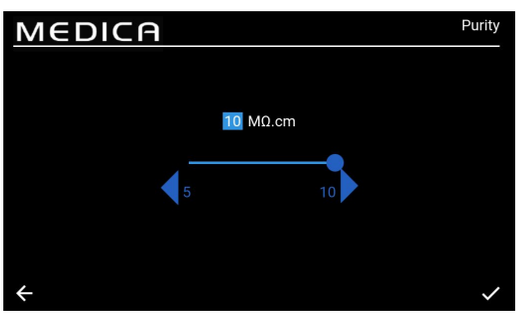

5.9 Set Purity Alarm

Once the 'Purity' option is selected, the screen will present the 'Purity' range. An acceptable range is from 5 to 10 MΩ.cm. The default setting is 10 MΩ.cm. This can be changed by using the arrows or slider bar to change the selected interval in increments/decrements of 1. Save the alarm set point changes by pressing the accept button and return to 'Alarms' screen.

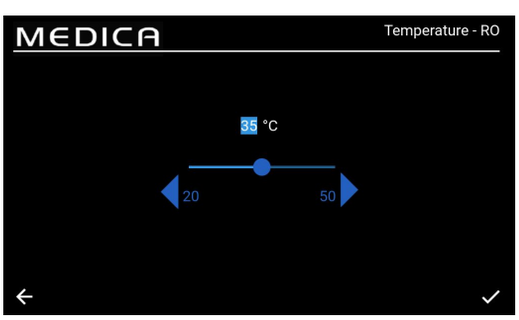

5.10 Set Temperature - RO Alarm

Once the 'Temperature-RO' option is selected, the screen will present the 'Temperature-RO' range. An acceptable range is from 20 to 50 ℃. The default setting is 35℃. This can be changed by using the arrows or slider bar to change the selected interval in increments/decrements of 1. Save the alarm set point changes by pressing the accept button and return to 'Alarms' screen.

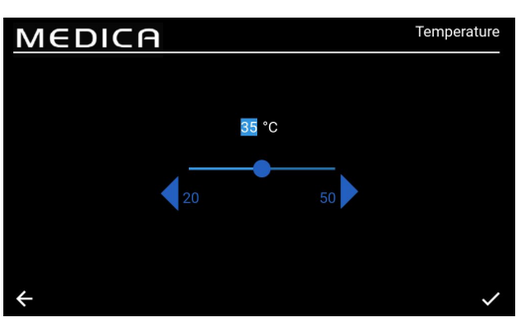

5.11 Set Temperature Alarm

Once the 'Temperature' option is selected, the screen will present the 'Temperature' range. An acceptable range is from 20 to 50 ℃. The default setting is 35℃. This can be changed by using the arrows or slider bar to change the selected interval in increments/decrements of 1. Save the alarm set point changes by pressing the accept button and return to 'Alarms' screen.

5.12 Set Audible Alarm

Once the 'Audible Alarm' option is selected, the 'Audible Alarm' screen will be shown. Setting can be changed by ticking or unticking the box to Enable or Disable the audible alarm. The default setting is 'Enabled'. Save the alarm changes by pressing the accept button and return to 'Alarms' screen.

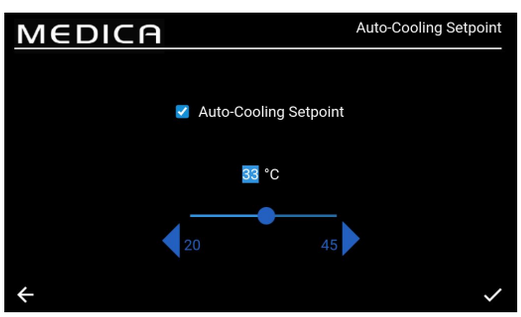

5.13 Set Auto-Cooling Setpoint

Once the 'Auto-Cooling Setpoint' option is selected, the 'Auto-Cooling Setpoint' screen will be shown.
Setting can be changed by ticking or unticking the box to Enable or Disable the Auto-Cooling function. The default setting is 'Disabled'.
When Enabled, the acceptable temperature range is from 20 to 45℃. The default setting is 33℃. This can be changed by using the arrows or slider bar to change the selected interval in increments/decrements of 1. Save the alarm changes by pressing the accept button and return to 'Alarms' screen.

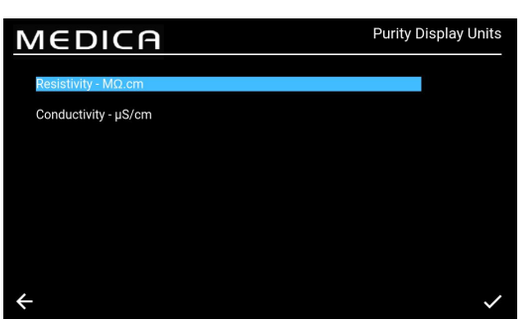

5.14 Set Purity Display Units

Once the 'Purity Display Units' option is selected, the 'Purity Display Units' screen will be shown. The options are 'Resistivity - MΩ.cm' or 'Conductivity - µS/cm', with the default option being 'Resistivity - MΩ.cm'. This can be changed by selecting the chosen display unit, and accepting the change by pressing the accept button, which returns the user to the 'Main Menu' screen. The purity value for the Resistivity unit is displayed up to 1 decimal place. The purity value for the Conductivity unit is displayed up to 3 decimal places.

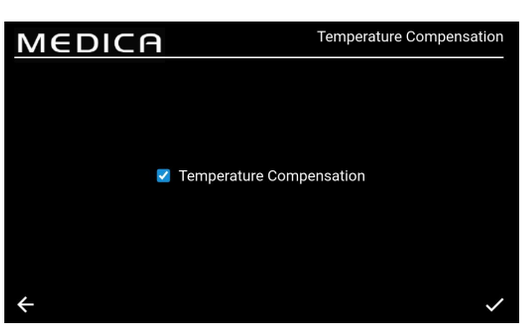

5.15 Set Temperature Compensation

Users will be able to set the Temperature Compensation setting. Once the 'Temperature Compensation' option is selected, the 'Temperature Compensation' screen will be shown. Setting can be changed by ticking or unticking the box to Enable or Disable the Temperature Compensation. The default setting is 'Enabled'. Save the alarm changes by pressing the accept button and return to 'Main Menu' screen.

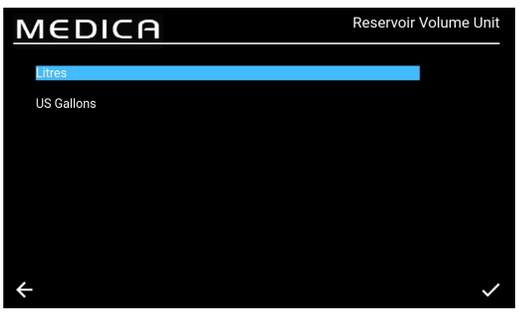

5.16 Set Reservoir Volume Unit
Once the 'Reservoir Volume Unit' option is selected, the 'Reservoir Volume Unit' screen will be shown. The options are 'Litres' or 'US Gallons', with the default option being 'Litres'. This can be changed by selecting the chosen option. Save the changes by pressing the accept button and return to 'Main Menu' screen. Volume unit in 'Litres' is displayed up to 1 decimal place. Volume unit in 'US Gallons' is displayed up to 3 decimal places (One US gallon is equal to 3.785 litres)

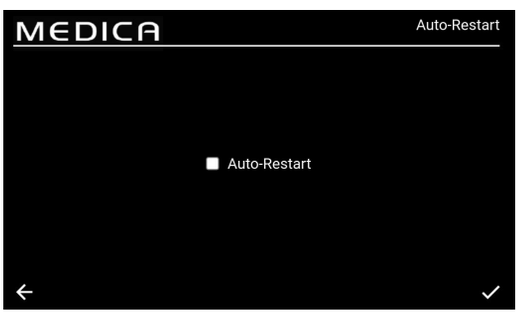

5.17 Set Auto-Restart
Once the 'Auto-Restart' option is selected, the 'Auto-Restart' screen will be shown. Setting can be changed by ticking or unticking the box to Enable or Disable the auto-restart feature. The default setting is 'Enabled'. Save the changes by pressing the accept button and return to 'Main Menu' screen.

5.18 ECO MODE

The **MEDICA** can be programmed to operate on specific days between selected times. This is to optimise the efficiency of the unit and to minimize rises in water temperature. During the "ECO Mode" period the unit will display the following on the information scroll bar; 'Periodic Recirculation - hh:mm' during 10 mins of recirculation and 'Standby' during 50 mins of process off.
It is possible to override this mode by pressing the "Process" button. During the "ECO Mode" period the unit will run in intermittent recirculation (10 minutes every hour) to maintain water purity around the distribution loop.

5.19 Continuous Recirculation (24/7)

If the unit is set to continuous recirculation, it will constantly re-circulate the water and fill the reservoir level when it falls below the refill set point as required. It is recommended that the system only runs in continuous mode when the demand for water is high (greater than 50% of the make up flow) due to slow temperature increase during recirculation.

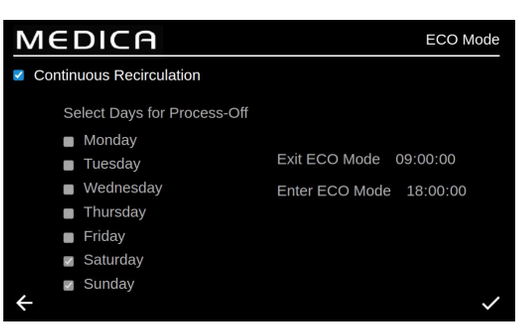

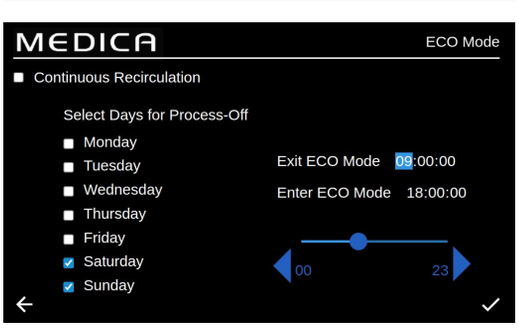

5.20 Set ECO Mode
Once the 'ECO-Mode' option is selected, the 'ECO-Mode' screen will be shown. The options are 'Enabled' or 'Disabled', with the default option being 'Enabled'. Save the changes by pressing the accept button.

Once the "Continuous Recirculation" box is unticked, there is a list of selectable options from Monday to Sunday. The default setting is that Monday to Friday are ticked/enabled. The user can also set the 'ECO-Mode' start and stop times. The defaults for this are Start Time at 18:00, and Stop Time at Sleep 06:00. On accepting the Operating days and times, save the settings and return to the Main Menu

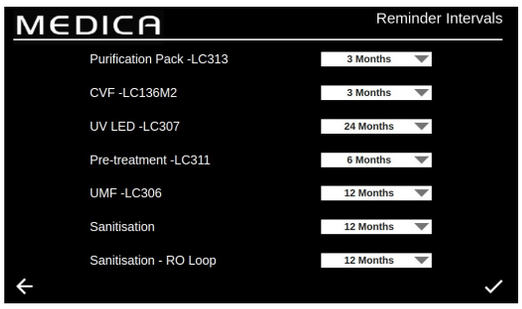

5.21 Set Replacement Reminder Intervals

The system will show the interval options for each consumable.

Once the 'Reminder Intervals' option is selected, the screen will display a list of the applicable consumables and procedures for which a reminder interval can be selected.

For the chosen consumable/procedure, the system will allow the user to select one of the pre-defined intervals as listed below.

Purification Pack;

- 1 month
- 3 months (default)
- 6 months
- 12 months

CVF;

- 3 months (default)
- 6 months
- 9 months
- 12 months

UV LED;

- 12 months
- 24 months (default)
- 36 months

Pre-treatment;

- 3 months
- 6 months (default)
- 12 months
- 24 months

UMF;

- 6 months
- 12 months (default)
- 24 months

Sanitisation/Sanitisation - RO Loop;

- 1 month
- 3 months
- 6 months
- 9 months
- 12 months (RO Loop default)

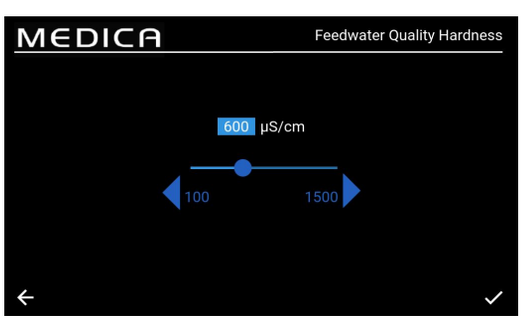

5.22 Set Feedwater Quality

An indication of the RO performance can be obtained using a calculation of ionic rejection in which the conductivity of the permeate is compared to that of feedwater.

Upon selecting 'Feedwater Quality µS/cm' from the Menu, present the 'Feedwater Quality µS/cm' screen.
Acceptable range: 100 to 1500 µS/cm.
Default setting 600 µS/cm.
On accepting, save the setting return to 'Menu' screen.

5.23 Set Water Hardness

The Feedwater Hardness setting will help calculate the estimated time for replacement of consumables.

Upon selecting 'Feedwater Hardness' from the Menu, present the 'Feedwater Hardness' screen.

- Selection options;
  - Soft (i.e. 0 to 100 ppm as CaCO3, or <40 ppm Ca^{2+})
  - Hard: (i.e. > 100 ppm as CaCO3 or >40 ppm Ca^{2+})
- Default setting: Hard
- On accepting, save the setting return to 'Menu' screen

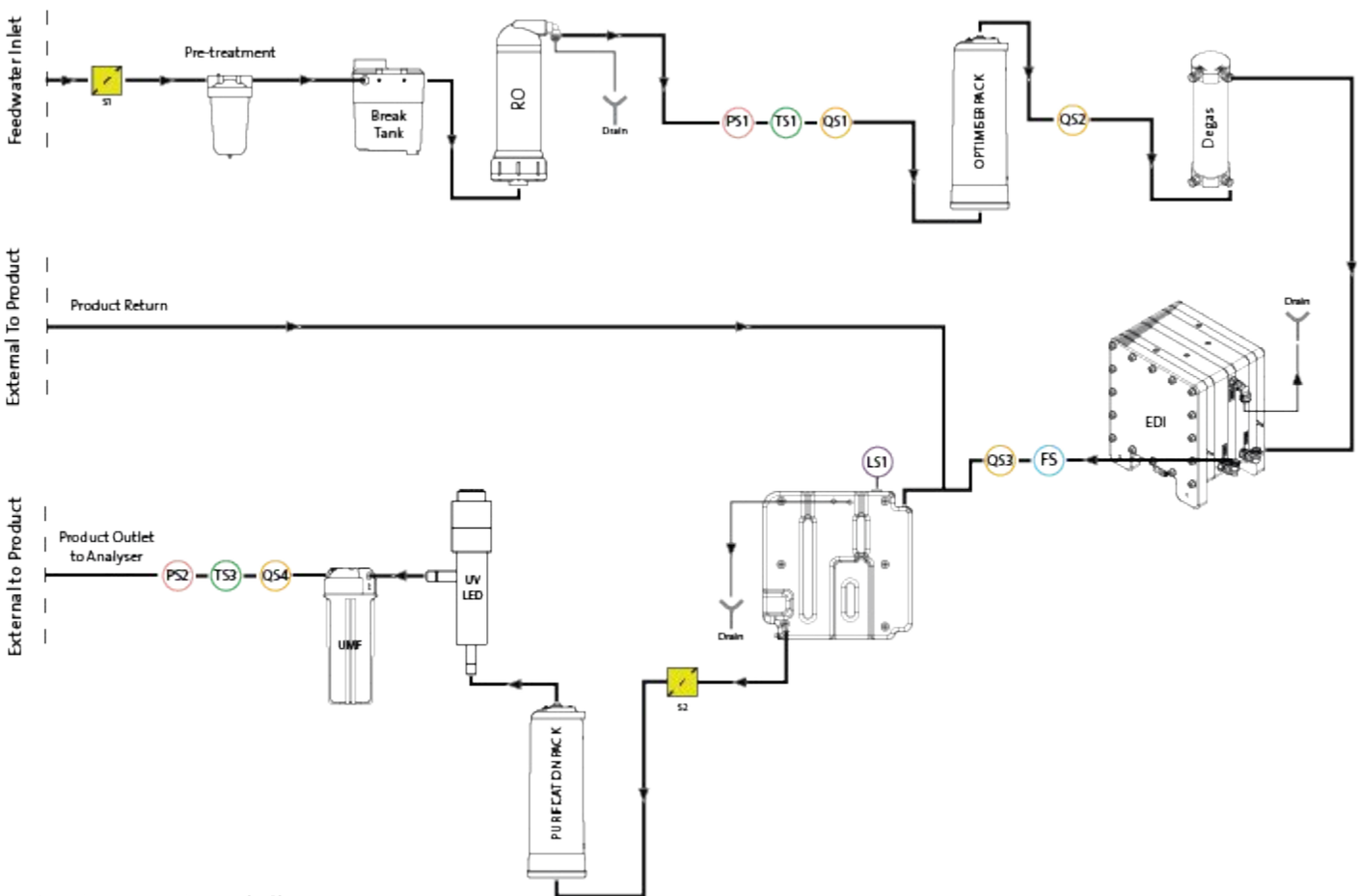

6.1 Process Description

The product consists of a single box solution where all purification technologies are included inside, along with an internal 75L reservoir.

MEDICA is designed to operate from a pressurised potable water supply (drinking water), and operates as follows:

1. The potable water passes through a series of purification techniques to remove different types of impurities.
2. The permeate water is collected in the internal reservoir (or the external reservoir if installed).
3. Water from the reservoir is drawn into the main recirculation stream by the recirculation pump and passes through the purification loop, which provides a polishing step and prevents any bacterial growth.
4. The purified water is either delivered to the analyser or returns to the reservoir. The delivery of water is controlled by means of a pressure sensors which adjusts the recirculation pump when it senses an analyser demanding water.
5. During periods of non-use the system can be set to eco mode to maintain water purity with maximum efficiency. In this mode, if the level of water in the reservoir falls below 10L (or below 20% on start up), then recirculation will be disabled until a level of 20% is reached. The recirculation will start automatically.
6. When the make-loop starts, there is an initial flush period prior to water being passed to the purification loop.

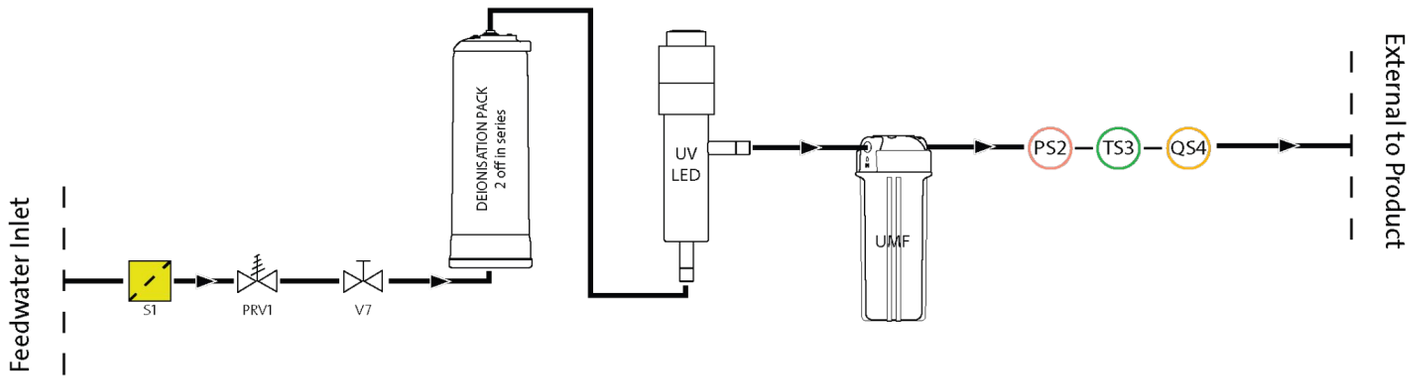

6.2 Emergency Bypass:

In cases of system failure, where water is still required to complete current operation on the attached analyser, the powered processes can be bypassed, which will then allow water to pass through the non-powered purification sections of the system to produce >1MΩ.cm. This is for emergency use only; the purification packs should be replaced prior to engaging the emergency bypass as well as after use, due to exhaustion of the packs at a much higher rate. The UV is inactive during the emergency bypass.

WARNING! FAILURE TO REPLACE PACK POST EMERGENCY BYPASS WILL RESULT IN REDUCED OUTLET WATER QUALITY

6.3 Bypass Operations:
To engage emergency bypass;

1. Shut off V11 (fig 1)
2. Open V7 (fig 2)

With a brand new purification pack installed there will be approximately 30 minutes of type 1 water available, before the packs are exhausted and water quality drops and risks damage to the analyser.

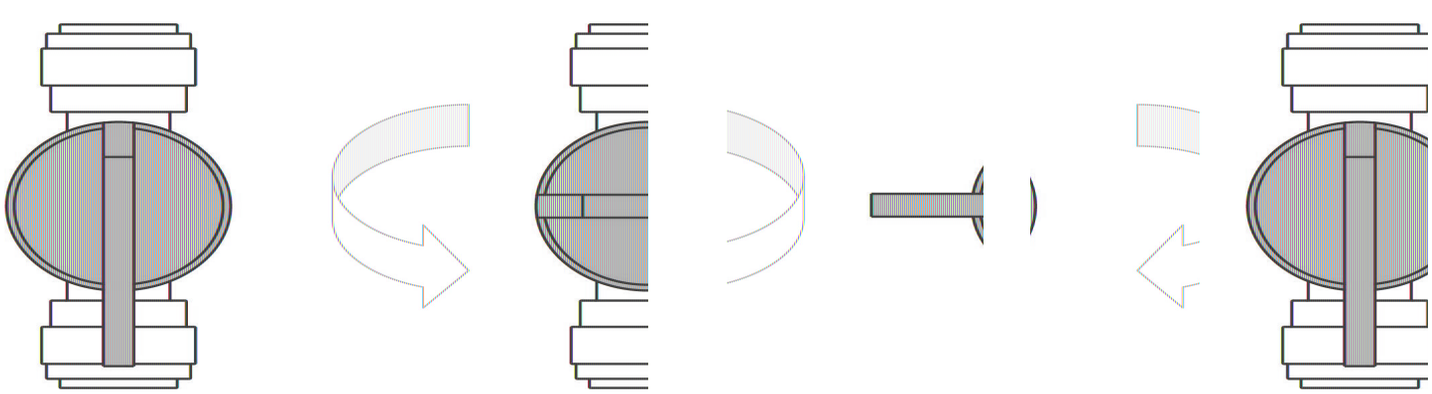

Fig 1 Fig 2

7.1 Accessories

ACCESSORIES	
Part No.	Description
LA822	Hubgrade
LA862	Installation Kit
LA863	External Tank Kit
LA864	BMS Accessory Kit
LA865	High Recovery Kit

An approved supplier or distributor should carry out any maintenance work not included in this handbook.
Note: Disposal of all end of life consumable items should be in accordance with local statutory regulations

WARNING! ALWAYS CHECK THAT THE MAINS ELECTRICAL POWER AND FEED WATER ARE SWITCHED OFF BEFORE ATTEMPTING ANY MAINTENANCE PROCEDURE.

8.1 General Cleaning:

When cleaning the units exterior surfaces, a clean damp cloth should be used to remove any dust or other particles.

8.2 Replacing Composite Vent Filter (LC136)

The Composite Vent Filter (CVF) should be replaced when indicated by the alarm (shown on screen).

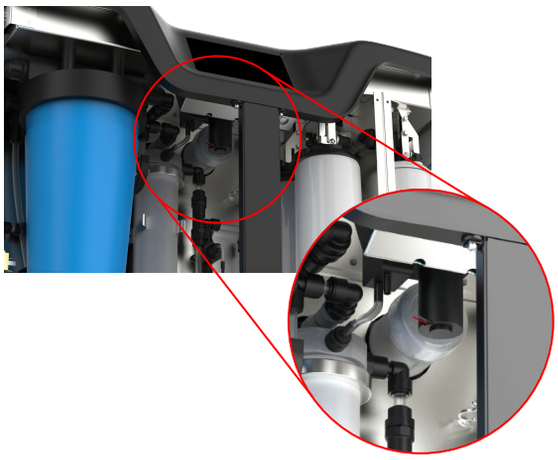

1. UNLOCK and OPEN front doors and locate CVF in centre towards the back of the unit.
2. UNSCREW old CVF and discard according to you local waste disposal guidelines.
3. UNPACK new CVF and Peel off the top sticker.
4. WRITE the installation date on the label of the filter for future reference.
5. INSTALL filter.
6. RESET consumable reminder as described in Section 8.11, page 27.

8.3 Replacing Purification Pack LC313 or Optimiser Pack LC312

The Purification Pack (LC313) should be replaced when indicated by the consumable alarm 73 or 90.
The Optimiser Pack (LC312) should be replaced when indicated by the consumable alarm 57. Alarm 56 will come up before, when 10% of pack life remains, and will indicate approximate remaining life in days, based on recent usage patterns.

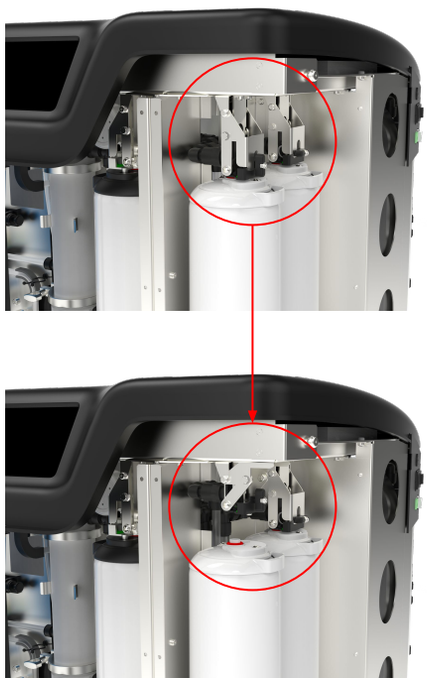

Fig 1

1. SELECT pack change required (Purification or Optimiser) from menu (see page 29)
2. OPEN right hand door and LOCATE pack (LC313 on the left hand side, LC312 on the right hand side)
3. TWIST the locking mechanism and lift arm to release the pack (Fig 1)
4. REMOVE pack (Fig 2)
5. REMOVE sealing plugs from inlet and outlet ports from new pack.
6. Wet O-rings and place pack onto mounting
7. PUSH down on locking mechanism until pack is engaged
8. TWIST the locking mechanism at the top of the mounting to lock pack in place
9. CONFIRM the pack has been reinstalled on the screen and make sure no alarms are showing (alarms 92, 97 or 59)
10. UNIT will begin recirculation, the reset reminder date and/or counter will automatically be set after the pack change process is complete.

Fig 2

8.4 Replacing Ultra-Microfilter (LC306)

The Ultra-Microfilter (UMF) should be replaced when indicated by the consumable alarm 71

1. PROCESS off and isolate analyser
2. UNLOCK and OPEN front doors
3. LOCATE UMF in bottom left clear housing (Fig 1)
4. UNSCREW the housing from the lid, using the tools provided in the installation kit (Fig 4)
5. EMPTY the water from the housing to drain
6. REMOVE the UMF from the housing
7. REPLACE with new UMF, ENSURING it is central within the bowl
8. SCREW back into the lid, using the tool provided in the installation kit
9. PROCESS on and do not use unit for 2 minutes while water recirculates and ensure quality returns to normal levels
10. RESET reminder as described in section 8.13, page 27.

8.5 Replacing Pre-treatment (LC311)

The replacement frequency of the pre-treatment cartridge is dictated by the purity of the feed water. It should be replaced in the following circumstances:

- When indicated by the consumable alarm 69
- After replacement of RO modules

8.6 Pre-Treatment Cartridge (LC311)

1. POWER OFF the unit to isolate main water supply
2. UNLOCK and OPEN front doors
3. LOCATE wide 10" blue housing in top left of the unit (Fig 2)
4. RELEASE Pressure by opening manual valve V13 located behind the Pre-Treatment housing (Fig 3).
5. TWIST open the housing from the lid, using the tools provided in the installation kit (Fig 5)
6. REMOVE old filter, keeping upright as the filter will be full of water
7. DISCARD in accordance with local regulations. (see Health and Safety).
8. REMOVE new cartridge from packaging.
9. PLACE filter in the centre of the housing bowl, ensuring O-ring at top and bottom are flat and centred.
10. TWIST the housing back into the lid using the tools provided in the installation kit until tight.
11. RESET reminder as described in section 8.14, page 28.
12. PROCESS on and check for leaks

Fig 1

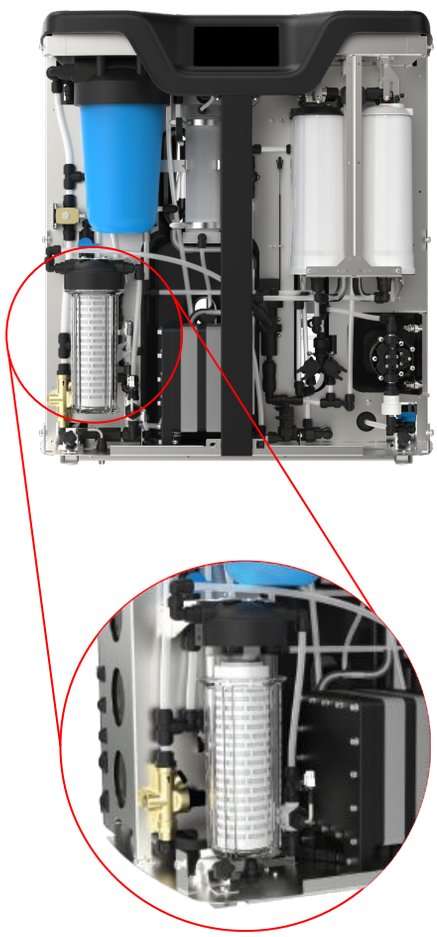

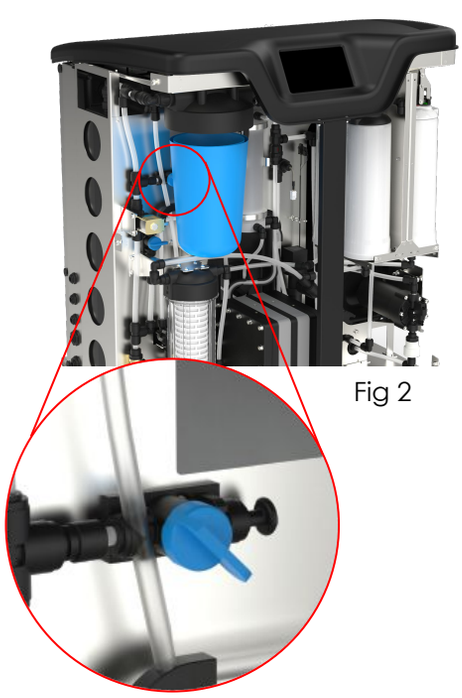

Fig 2

Fig 3

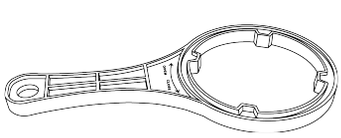

Fig 4

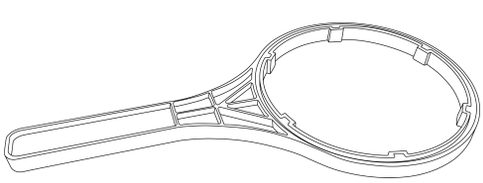

Fig 5

8.7 Replacing Degas Module (LC310)

The Degas Module should be replaced after a maximum of 3 years operation

1. ENSURE process is OFF
2. UNLOCK and OPEN front doors
3. LOCATE Degasser in centre
4. DISCONNECT tubing to inlet and outlet water lines, as well as inlet and outlet air lines.
5. REMOVE used module from clip and discard in accordance with local regulations.
6. REMOVE sealing plugs from inlet and outlet ports from new module
7. INSERT new cartridge into the mounting clip
8. RE-CONNECT tubing to inlet and outlet water lines, as well as both air lines, as shown in Fig 1.

Fig 1

8.8 RO Modules (LC303)

The reverse osmosis modules should be replaced if permeate water purity or flow rate is not adequate and does not meet predicted or previous performance. For information regarding the replacement of the reverse osmosis module please contact your local Service Representative / Distributor.

8.9 UV LED Lamp (LC307)

The Ultra Violet Lamp should be replaced every 24 month or if it does not meet predicted or previous performance. For information regarding the replacement of the UV LED please contact your local Service Representative / Distributor.

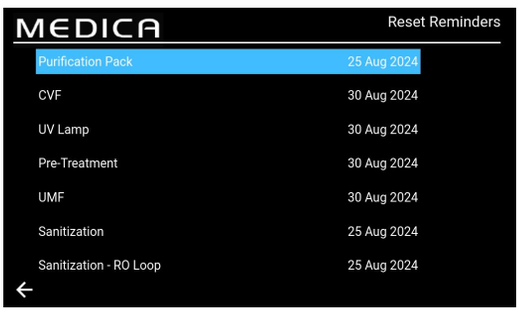

8.10 Reset Reminders

The run time calculation will be based on a system clock, not operational hours. The system will have the ability to reset reminders to replace consumables.

- Within the 'Reset Reminders' screen there is a list of the Consumables options (the first option is highlighted by default)
- On accepting the chosen consumable, one of the following screens will be shown;

8.11 Reset Reminders - CVF

Once the 'CVF' option is selected, the screen will display the new reminder date based on the previously chosen interval. When this interval is chosen, save the date by pressing the accept button and return to the reset reminder screen.

8.12 Reset Reminders - UV Lamp

Once the 'UV' option is selected, the screen will display the new reminder date based on the previously chosen interval. When this interval is chosen, save the date by pressing the accept button and return to the reset reminder screen.

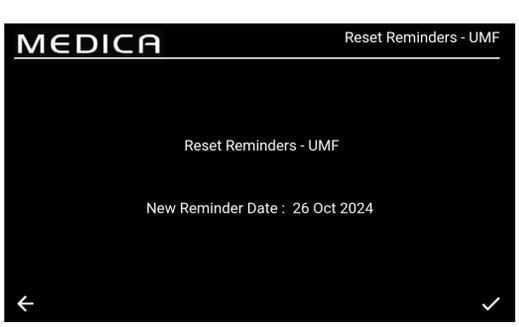

8.13 Reset Reminders - UMF

Once the 'UMF' option is selected, the screen will display the new reminder date based on the previously chosen interval. When this interval is chosen, save the date by pressing the accept button and return to the reset reminder screen.

8.14 Reset Reminders - Pre-Treatment

Once the 'Pre-Treatment' option is selected, the screen will display the new reminder date based on the previously chosen interval. When this interval is chosen, save the date by pressing the accept button and return to the reset reminder screen.

8.15 Reset Reminders - Sanitisation

Once the 'Sanitisation' option is selected, the screen will display the new reminder date based on the previously chosen interval. When this interval is chosen, save the date by pressing the accept button and return to the reset reminder screen.

8.16 Reset Reminders - Sanitisation RO-Loop

Once the 'Sanitisation - RO Loop' option is selected, the screen will display the new reminder date based on the previously chosen interval. When this interval is chosen, save the date by pressing the accept button and return to the reset reminder screen.

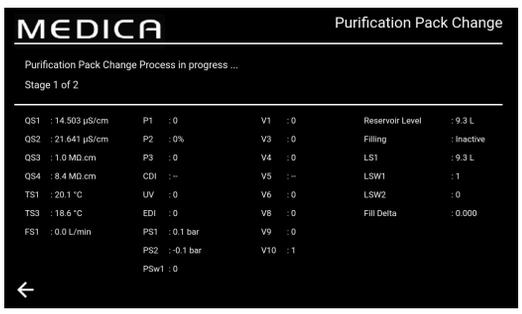

8.17 Purification Pack Change

Selecting this option will initiate the Purification Pack change procedure. On screen commands will tell the user when the Purification Pack change must be completed, if this change is not done at the correct time, the Purification Pack may be damaged or the screen may show an incorrect error state, halting the process. This may require the process to be restarted and done correctly.

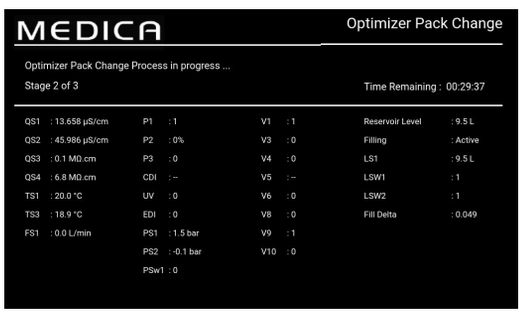

8.18 Optimiser Pack Change

Selecting this option will initiate the Optimiser Pack change procedure. On screen commands will tell the user when the Optimiser Pack change must be completed, if this change is not done at the correct time, the unit may be damaged or the screen may show an incorrect error state, halting the process. This may require the process to be restarted and done correctly.

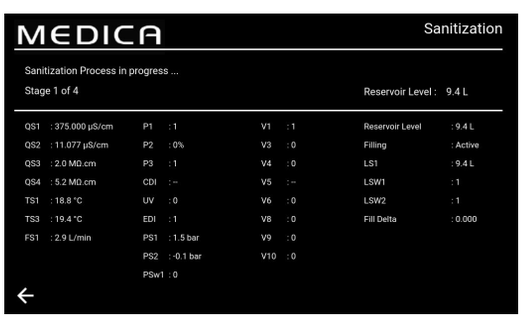

8.19 Sanitisation and Sanitisation - RO Loop

Selecting this option will initiate the Sanitisation or Sanitisation - RO Loop procedure. This can be done during the annual service maintenance.
Once triggered, the unit will proceed with the Sanitisation of either the full unit, or of the RO Loop only (as selected). This will take the user to the Sanitisation screen, and show prompts depending on what may be required from the user. This process is mostly automated.

RO Sanitisation:

1. Ensure the system is ready for sanitisation, select the RO sanitisation option.
2. Follow the on-screen instructions and add the sanitant to the break tank. To access the break tank, the top cover must be removed.
3. Unscrew the filter bowl with the tool provided, remove the internal filter and add the sanitant (2 x CT3 tablets (or ¼ Effersan tablet - US only)).
4. Proceed by following the on-screen sanitisation instructions until the sanitisation is completed.

RO and Loop Sanitisation:

1. Ensure the system is ready for the RO and Loop Sanitisation.
2. Isolate the application (close the shut-off valve - see Section 6.3, page 22)
3. Select Sanitisation in the main menu (RO and Loop)
4. Follow the on-screen instructions and add the sanitant into the break tank (for RO - 2 x CT3 (or ¼ Effersan tablet - US only)) and to the UMF filter bowl (For Loop - 3 x CT3 (or ½ Effersan tablet - US only))

Note: *To add the sanitant, unscrew the UMF filter bowl and add the sanitant (3 x CT3 tablets (or ½ Effersan tablet - US only)) to the filter bowl. If a new UMF will be installed, ensure it is done before starting the sanitisation. Once sanitant is added, replace the filter bowl into the unit and follow the on screen instructions (the UMF should be kept inside the filter bowl during the sanitisation process)*

1. Proceed by following the on-screen sanitisation instructions.

WARNING! THE UNIT MUST COMPLETE SANITISATION ONCE THE REQUIRED CHEMICAL IS ADDED, THE PROCESS CAN BE CANCELLED BEFORE CHEMICAL IS ADDED.

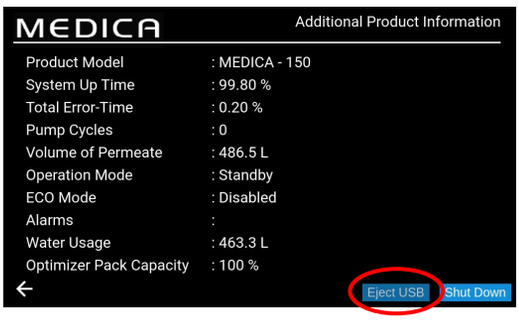

8.20 Data Logging

The system will have the ability to save the system log onto a USB drive or Remote Logging. The information in the log file can assist in successfully diagnosing certain faults and issues in the system. Once the 'Data Logging' option is selected, the screen will display the options; "Enabled" or "Disabled". The default setting is "Disabled"

If Logging is enabled, the 'Data Logging Interval' screen will be displayed. When the interval is chosen, save the time by pressing the accept button.

To safely eject the USB and avoid file corruption, click the "Eject USB" button located on the Additional Product Information Screen (shown on the left).

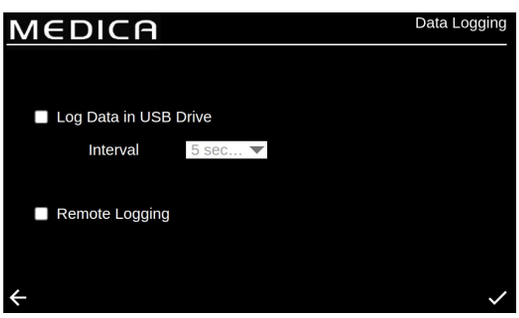

8.21 Data Logging Interval

If Logging is enabled, the 'Data Logging Interval' screen will be displayed. The interval options are in the drop down menu.

When an interval is chosen, save the change by pressing the accept button.

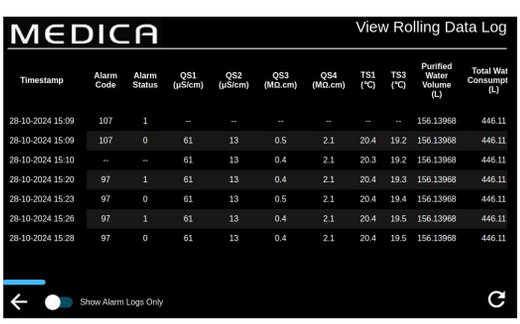

Timestamp	Alarm Code	Alarm Status	QS1 (µS/cm)	QS2 (µS/cm)	QS3 (MΩ.cm)	QS4 (MΩ.cm)	TS1 (°C)	TS3 (°C)	Purified Water Volume (L)	Total Wat Consumpt (L)
28-10-2024 15:09	107	1	--	--	--	--	--	--	156.13968	446.11
28-10-2024 15:09	107	0	61	13	0.5	2.1	20.4	19.2	156.13968	446.11
28-10-2024 15:10	--	--	61	13	0.4	2.1	20.3	19.2	156.13968	446.11
28-10-2024 15:20	97	1	61	13	0.4	2.1	20.4	19.3	156.13968	446.11
28-10-2024 15:23	97	0	61	13	0.5	2.1	20.4	19.4	156.13968	446.11
28-10-2024 15:26	97	1	61	13	0.4	2.1	20.4	19.5	156.13968	446.11
28-10-2024 15:28	97	0	61	13	0.4	2.1	20.4	19.5	156.13968	446.11

8.22 View Rolling Data Log

This page states all internal controls and their current states, logging up to 7 days at 60 minutes intervals. All this information can be filtered to show alarm logs only. The rolling data cannot be extracted.

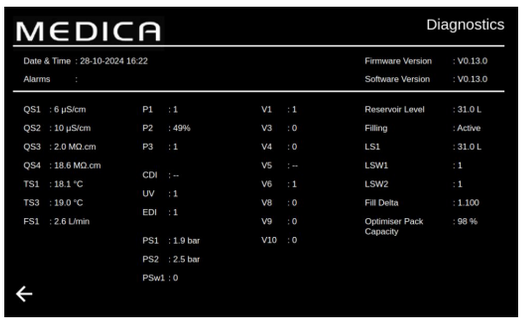

8.23 Diagnostics

Diagnostic screen Information:

- Screen title 'Product name with module variant'
- Date and Time
- Software Version
- Alarm codes
- Quality Sensor readings
- Temperature Sensor readings
- Flow Sensor readings
- Valves status
- Pumps status
- CDI status
- UV status
- EDI status
- Level Switch status
- Pressure Sensor status
- Pressure Switch status
- Degasser - Air Pump P3 status
- Reservoir Level (in litres)
- Fill Status
- Level Sensor LS - Display current reservoir level
- Fill delta - This value is used to predict DI pack wear.
- Optimiser Pack Capacity Information - in percentage (%)

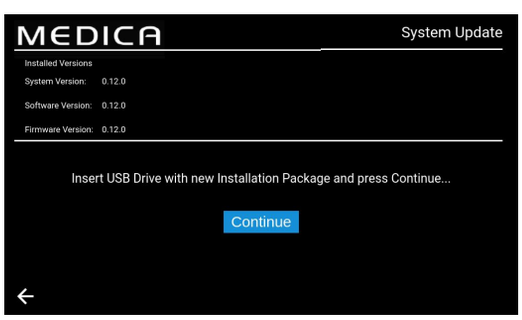

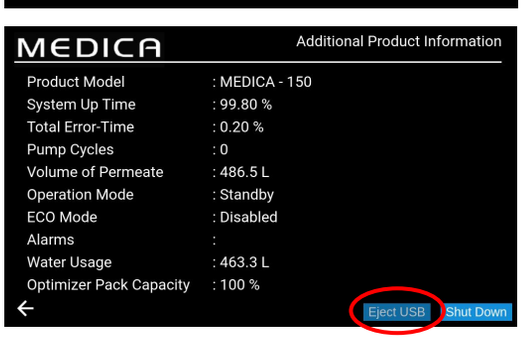

8.24 Software Update

The option to update software will be menu-driven. The user will need a USB with the update software on - it is recommended to use a FAT-formatted, standard 2GB USB Flash Drive.

- On-screen instructions to initiate the installation.
- Progress bar showing percentage completion.
- Single software to update both software - processor board and application software.
- In case of installation issues, it should have the ability to roll back to a backup/previous version of the software.
- After the software update has been completed and the system completed a reboot, return to the "Additional Information Screen" to EJECT the USB (see section 8.20, page 30 for more information) before removing from the USB port to avoid corruption.

9.1 User Alarm Definitions

All the alarms (displayed on the following page) are available from all screens as a pop-up, located along the top of the screen, coloured to match the alarm's classification.
The key below shows what classification each alarm can be, as well as the definition.

CLASSIFICATION	DEFINITION
Critical	The system is unable to supply water and is inoperable and requires immediate repairs. The user should seek an authorised service provider if required.
Non-Critical / Warning	The system has detected a fault that is not yet affecting the water supply capabilities. However, the unit will need service/repairs quickly, otherwise the final water purity or water delivery performance may be affected and may result in final application problems.
Notification	The system has detected a fault that does not impair water function, but should be repaired, otherwise it will result in a degradation in water quality in the short term but may result in long-term performance issues if left unresolved.

The "Override" button (visible below) is for emergencies only.
The user is able to "Override" any conditions or alarms that can be deemed potentially misleading. For example, if the "Purification Pack Not in Place" (Alarm 92) appears, stating the Pack is inserted incorrectly, when the user or Technical Support team know otherwise.

WARNING! OVERRIDING AN ALARM AND NOT SEEKING AID FROM TECHNICAL SUPPORT COULD LEAD TO A VOID OF WARRANTY.

The image below shows how each alarm will be displayed on the unit screen once the alarm indicator has been pressed, each alarm will have the date and time of when the alarm happened, the error code and the details of what the alarm is caused by, some alarms can be overridden and muted.

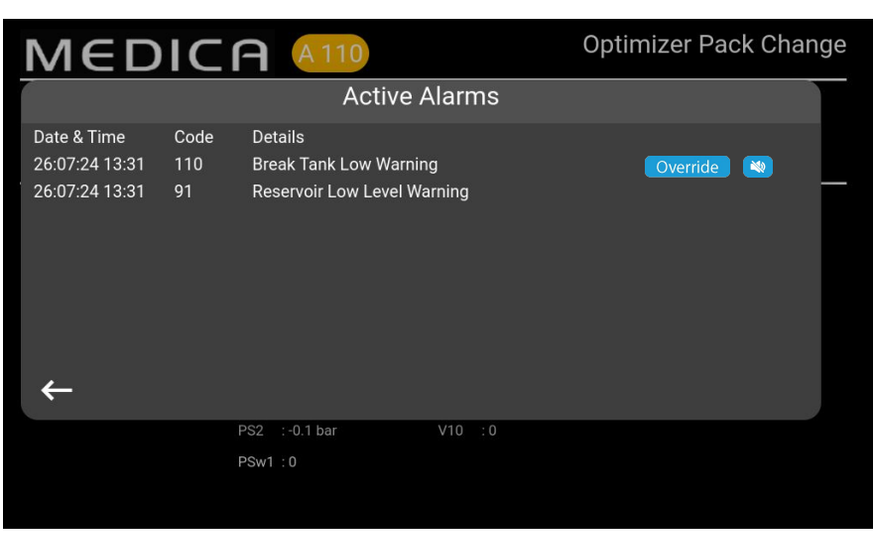

9.2 User Alarm Codes

The **MEDICA System** alarm codes are as follows:

CODE	ALARM CONDITIONS	CODE	ALARM CONDITIONS
57	Replace Optimiser Pack	**96**	Recirculation Loop High Pressure - PSW1
59	Optimiser Pack not in Place	**97**	Level Sensor Error (LS1)
79	Invalid Pack (Purification Pack or Optimiser Pack)	**98**	Leak Detected
86	Break Tank Error	**100**	Under Temperature
92	Purification Pack Not in Place	**106**	Reservoir Critical Level Alarm
95	Over Temperature		

CODE	ALARM CONDITIONS	CODE	ALARM CONDITIONS
58	EDI Low Flow	**109**	Storage Device Error
63	High Pressure Permeate (PS1)	**110**	Break Tank Low Warning
81	External Softener Error	**117***	CDI High Current
102*	CDI Low Current	**119**	Pressure Sensor Fault (PS1)
103	Broken Level Switch		

*Not applicable to non-CDI variant

CODE	ALARM CONDITIONS	CODE	ALARM CONDITIONS
56	Optimiser Pack Reminder	**88**	RO Water Quality Alarm (QS1)
69	Replace Pre-treatment	**89**	Product Water Temperature Alarm (TS3)
70	Replace UV	**90**	Product Water Quality Alarm (QS4)
71	Replace UMF	**91**	Reservoir Low Level Warning
72	Replace Vent Filter	**104**	Optimiser Pack Quality Alarm
73	Replace Purification Pack	**105**	EDI Water Quality Alarm (QS3)
74	Sanitisation Reminder	**107**	Sanitisation Reminder - RO Loop
87	RO Water Temperature Alarm (TS1)		

10. Troubleshooting

This section highlights the problems that can occur with the **MEDICA** system and how to rectify them. The system will normally sound an alarm and the respective icons will flash. The alarm sound can be silenced by pressing the mute button. If the system cannot be repaired using this manual please call either your supplier or local distributor. (See Section 13 - Useful Contact Details (page 39)).

Problems	Action
Touch screen Blank	Touch the blank screen to wake up the unit. If this doesn't work, use the override switch located to the right of the screen on the inside of the door to manually switch the unit on and to allow continues operation. Please seek service call to repair.
Unit will not switch on	Please ensure the unit has been switched on from the right rear, the fuse has not blow and is fitted, If the problem is not resolved, please seek service call to repair.
Touch screen not responding to touch	Remove top cover and ensure USB has not become disconnected, restart the unit from the rear of the unit. If problem continues, please seek service centre for repair.
Inconsistent Touch Control	Make sure the protective film has been removed from the screen
No Pack fitted or incorrect pack fitted alarm is triggered (alarm code 79)	Please switch unit to process off, remove current pack, refit pack and if alarm persists press override button when opening up alarm screen, if present refit pack as shown within the installation instructions. Contact your service centre for repair
Unit is leaking (alarm code 98)	If possible locate the leak and contact service centre to arrange repair. To clear this alarm, remove leak detector from the slot if required, dry off the pins and clear the leak. Restart the unit to continue the process This will clear the alarm - if the alarm is still visible, the user should seek an authorised service provider.
Break tank level low (alarm code 110)	Isolate the unit from the mains supply and ensure there is water pressure and flow as required by the feed water specification (page 33). The system will clear the alarm if enough pressure and flow is detected by the unit. If the alarm persists contact service centre for repair.
EDI Alarm	Seek service centre support for repair.
Over pressure alarm	Ensure Emergency Bypass valve (V11) is open. Switch unit off and seek service centre support to repair.

11.1 Feedwater			
Source	Potable tap water is detailed below. *Failure to comply with the minimum feedwater pretreatment recommendations will affect the life and performance of key components within the **MEDICA**, and may invalidate the warranty*		
Contaminant	**Measure**	**Range**	**Pretreatment ***
Calcium (Hardness)	Ca as ppm CaCO3	< 300	None
		> 300	Softener or use very low RO recovery
Free Chlorine <0.5 ppm Recommended	Cl ppm	0 - 2.0	Internal 10" pre-treatment
		> 2.0	External 20" Pre-Treatment (check PAF0045 for more details)
Chloramine	Chloramine ppm	0 - 1.0	Internal 10" pre-treatment
		> 1.0	20" Carbon Filter if water usage is about 5000 litres per week. (check PAF0045 for more details)
Silica	SiO2 ppm	< 30	Internal 10" pre-treatment
		> 30	20" cartridge depth filter
Fouling Index	FI	< 10	Internal 10" pre-treatment
		>10	Backwashable media filter with a minimum flow rate of 20l/min
Iron/Manganese	Fe/Mn ppm	0.05 - 0.1	Internal 10" pre-treatment
		> 0.1	Back-washable pre-filter*
Organics	TOC ppm C	< 3	Internal 10" pre-treatment
		> 3	Cylinder of carbon sized correctly
TEMPERATURE	4°C - 40°C (Recommended 15°C - 25°C)		
FLOWRATE (requirement @ 15°C)	9 L/min		
Drain requirements (gravity fall with air gap)	20 L/min		
Feedwater Pressure	6 bar (90 psi) maximum, 2 bar (30 psi) minimum		

*Installed in feedwater supply

Note: If feedwater purity is variable or values are close to the top of one of the ranges, provide pre-treatment for the higher range or seek advice from Technical Support at ELGA LabWater. Pre-treatment LC311 included in the starter kit LC314.

11.2 Dimensions	
Height	820mm (32.8") 834mm (33.4") including castors
Width	794 (31.8")
Depth	470mm (18.8")
Supply Weight	Up to 103kg
Operational Weight	Up to 197kg
Installation	Floor

11.3 Connections	
Inlet	12mm OD Tube
Drain	12mm OD Tube
EDI Drain	10mm OD Tube
Auto- Cooling Drain	10mm OD Tube
Recirculation Loop Outlet*	10mm OD Tube
Recirculation Loop Inlet*	10mm OD Tube

11.4 Electrical Requirements	
Mains Input (system specific)	230 Vac (+/- 10%), 50 Hz 115 Vac (+/- 10%), 60 Hz
Power Consumption (peak demand)	720 VA
Electrical Protection Rating	2x T6.3 Amp fuses (230 Vac models) 2x T10 Amp fuses (115 Vac models)
Noise Level (Db)	<60 dBa

11.5 Product Water Specification	
Delivery Flowrate	4.5 l/min @ 1 bar, 30m maximum distribution loop length
Daily Usage (L) - typical	1200
Daily Usage (L) - maximum	3600
Inorganics	> 10 MΩ.cm @ 25°C
TOC ppb	< 30
Bacteria	< 1 CFU/ml**
Particles	0.05 µm

**System to be regularly sanitised and installed following ELGA LabWater installation design guidelines

General Limited Warranty

VWS (UK) Ltd warrants the products manufactured by it against defects in materials and workmanship when used in accordance with applicable instructions for a period of one year from the date of shipment for the products. VWS (UK) LTD MAKES NO OTHER WARRANTY, EXPRESSED OR IMPLIED. THERE IS NO WARRANTY OF MERCHANTABILITY OR FITNESS FOR A PARTICULAR PURPOSE. The warranty provided herein and the data, specifications and descriptions of the VWS (UK) Ltd products appearing in VWS (UK) Ltd's published catalogues and product literature may not be altered except by express written agreement signed by an officer of VWS (UK) Ltd. Representations, oral or written, which are inconsistent with this warranty or such publications are not authorized and, if given, should not be relied upon.

In the event of a breach of the foregoing warranty, VWS (UK) Ltd sole obligation shall be to repair or replace, at its option, any product or part thereof that proves to be defective in materials or workmanship within the warranty period, provided the customer notifies VWS (UK) Ltd promptly of any such defect. The exclusive remedy provided herein shall not be deemed to have failed of its essential purpose so long as VWS (UK) Ltd is willing and able to repair or replace any nonconforming VWS (UK) Ltd product or part. VWS (UK) Ltd shall not be liable for consequential, incidental, special or any other indirect damages resulting from economic loss or property damage sustained by any customer from the use of its products.

Water System Limited Warranty

VWS (UK) Ltd warrants the water systems manufactured by it, BUT EXCLUDING MEMBRANES AND PURIFICATION PACKS, against defects in materials and workmanship when used in accordance with the applicable instructions and within the operating conditions specified for the systems for a period of one year from the earlier of:

a) the date of installation, or
b) the 120th day following the date of shipment.

VWS (UK) LTD MAKES NO OTHER WARRANTY, EXPRESSED OR IMPLIED. THERE IS NO WARRANTY OF MERCHANTABILITY OR FITNESS FOR A PARTICULAR PURPOSE. The warranty provided herein and the data, specifications and descriptions of the VWS (UK) Ltd systems appearing in VWS (UK) Ltd published catalogues and product literature may not be altered except by express written agreement signed by an officer of VWS (UK) Ltd. Representations, oral or written, which are inconsistent with this warranty or such publications are not authorised and, if given, should not be relied upon. In the event of a breach of the foregoing warranty, VWS (UK) Ltd sole obligation shall be to repair or replace, at its option, any product or part thereof that proves to be defective in materials or workmanship within the warranty period, provided the customer notifies VWS (UK) Ltd promptly of any such defect. The cost of labour for the first ninety (90) days of the above warranty period is included in the warranty; thereafter, labour cost shall be at the customer's expense. The exclusive remedy provided herein shall not be deemed to have failed of its essential purpose so long as VWS (UK) Ltd is willing and able to repair or replace any nonconforming VWS (UK) Ltd system or component part. VWS (UK) Ltd shall not be liable for consequential, incidental, special or any other indirect damages resulting from economic loss or property damage sustained by any customer from the use of its process systems.

Products or components manufactured by companies other than VWS (UK) Ltd or its affiliates ("Non-VWS (UK) Ltd products") are covered by the warranty, if any, extended by the Product manufacturer.

VWS (UK) Ltd hereby assigns to the purchaser any such warranty; however, VWS (UK) LTD EXPRESSLY DISCLAIMS ANY WARRANTY WHETHER EXPRESSED OR IMPLIED, THAT THE NON - VWS (UK) LTD PRODUCTS ARE MERCHANTABLE OR FIT FOR A PARTICULAR PURPOSE.

NOTICE

VWS (UK) Ltd is constantly striving to improve its products and services. Consequently, the information in this document is subject to change without notice and should not be construed as a commitment by VWS (UK) Ltd. Also, VWS (UK) Ltd assumes no responsibility for any errors that may appear in this document. This manual is believed to be complete and accurate at the time of publication. In no event shall VWS (UK) Ltd be liable for incidental or consequential damages in connection with or arising from the use of this manual.
VWS (UK) Ltd. warrants its products against defects in materials and workmanship as described in the Warranty statement on the preceding pages.

ELGA LabWater
Lane End Business Park,
Lane End, High Wycombe
HP14 3BY
UK

Tel: +44 (0) 203 567 7300
Fax: +44 (0) 203 567 7305
E-mail: info@elgalabwater.com

For any technical queries please contact techsupport@elgalabwater.com

For the address of the nearest ELGA LabWater Sales and Service office visit the country list on our website.

http://www.elgalabwater.com

Or contact ELGA LabWater at the number above.